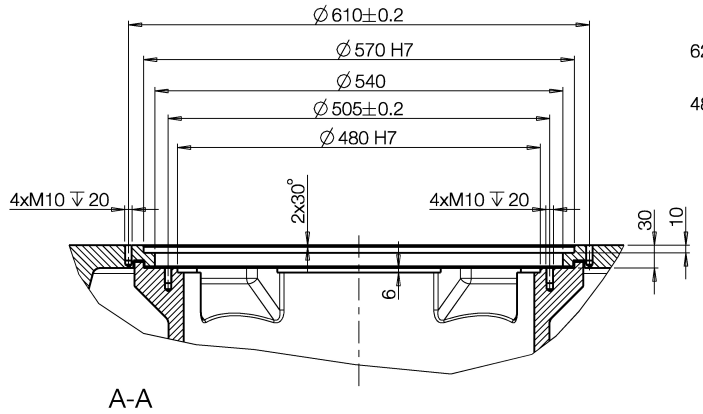
∅610±0.2
∅570 H7
∅540
∅505±0.2
∅480 H7
4xM10 ↧ 20
2x30°
4xM10 ↧ 20
30
10
6
A-A

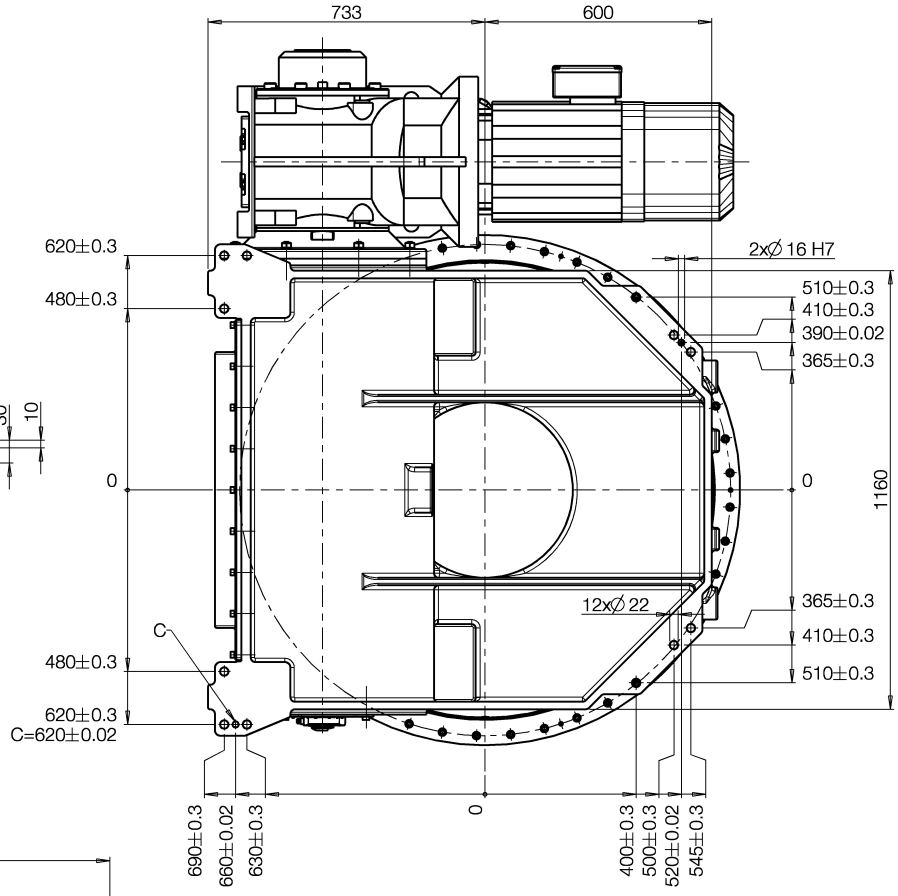
733
600
620±0.3
480±0.3
2x∅ 16 H7
510±0.3
410±0.3
390±0.02
365±0.3
0
0
1160
12x∅ 22
365±0.3
410±0.3
510±0.3
C
480±0.3
620±0.3
C=620±0.02
690±0.3
660±0.02
630±0.3
0
400±0.3
500±0.3
520±0.02
545±0.3

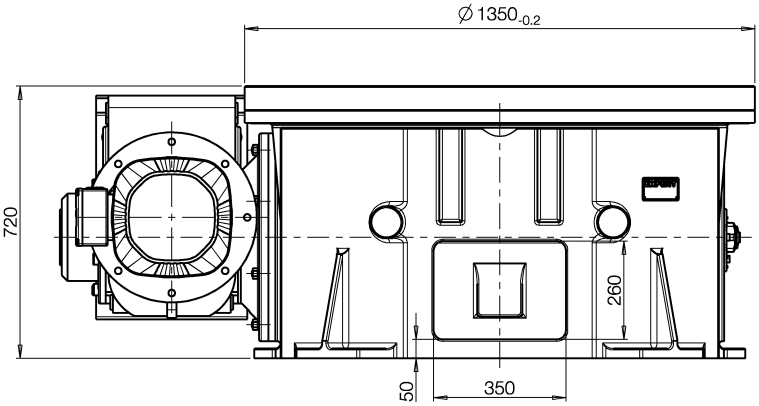
∅1350-0.2
720
260
50
350

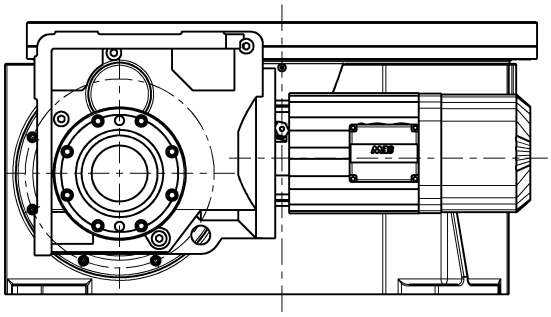

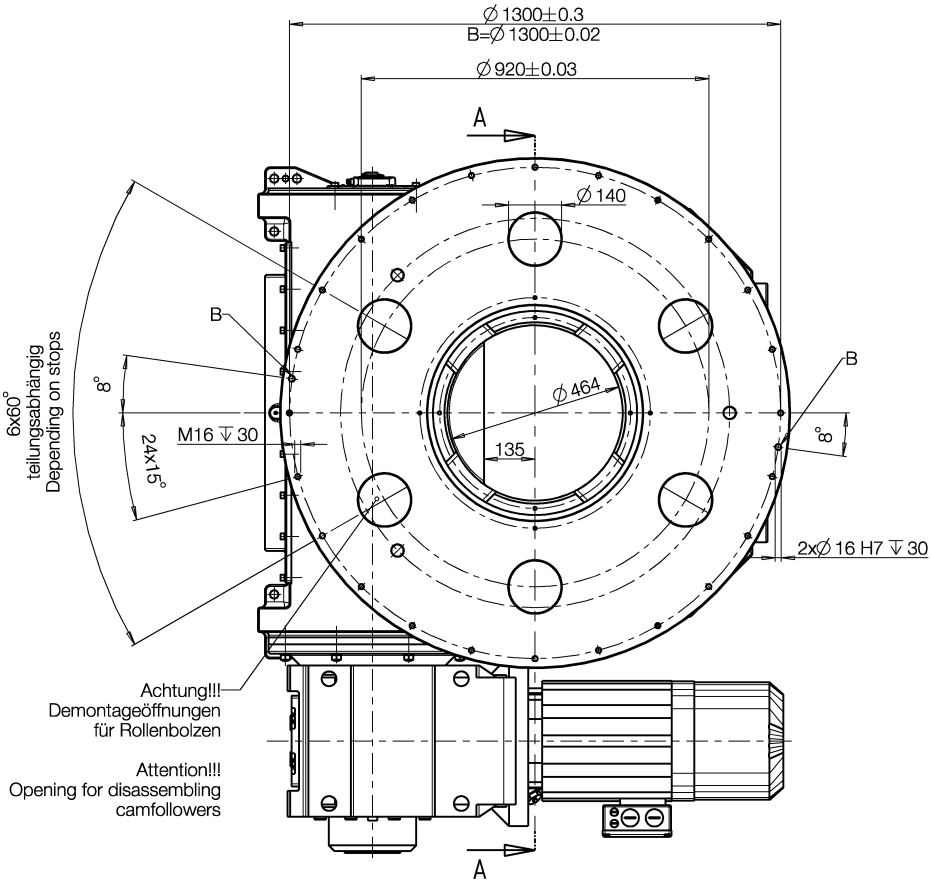
∅1300±0.3
B=∅1300±0.02
∅920±0.03
A
∅140
B
6x60°
teilungsabhängig
Depending on stops
8°
∅464
M16 ↧ 30
24x15°
135
B
8°
2x∅ 16 H7 ↧ 30
Achtung!!!
Demontageöffnungen
für Rollenbolzen
Attention!!!
Opening for disassembling
camfollowers
A